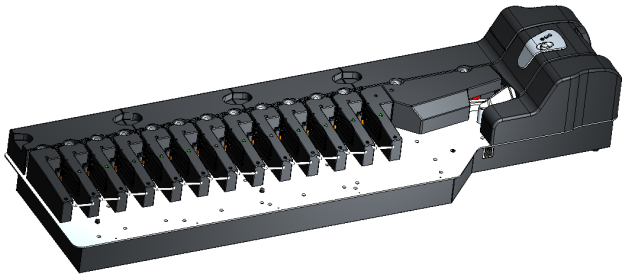

QDS20012-SYS

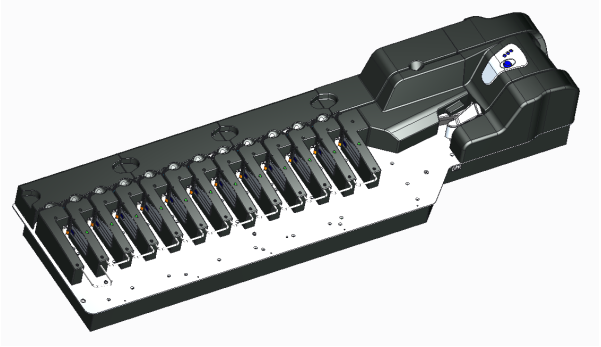

QDS20012-SYS-FE

QUANTUM DS® Series

Installation and Operations Guide

March 2024

© 2024 Digital Check Corp, Inc.

All rights reserved.

NO WARRANTIES OF ANY NATURE ARE EXTENDED BY THIS DOCUMENT. Any product or related information described herein is only furnished pursuant and subject to the terms and conditions of a duly executed agreement to purchase or lease equipment or to license software. The only warranties made by Digital Check Corp., if any, with respect to the products described in this document are set forth in such agreement. Digital Check cannot accept any financial or other responsibility that may be the result of your use of the information in this document or software material, including direct, special, or consequential damages.

You should be very careful to ensure that the use of this information and/or software material complies with the laws, rules, and regulations of the jurisdictions with respect to which it is used.

The information contained herein is subject to change without notice. Revisions may be issued to advice of such changes and/or additions.

Notice to U.S. Government End Users: This is commercial computer software or hardware documentation developed at private expense. Use, reproduction, or disclosure by the Government is subject to the terms of Digital Check standard commercial license for the products, and where applicable, the restricted/limited rights provisions of the contract data rights clauses.

FCC Statement

The statement below is included in this document to comply with a Federal Communications Commission (FCC) regulation. The FCC is an agency of the United States government; thus, the statement below applies to computing equipment installed in the United States of America. Digital Check is taking appropriate steps to be in compliance with FCC regulations and similar regulations of other countries.

Note: This equipment has been tested and found to comply with the limits for a Class A digital device, pursuant to part 15 of the FCC Rules. These limits are designed to provide reasonable protection against harmful interference in a residential installation. This equipment generates, uses and can radiate radio frequency energy and, if not installed and used in accordance with the instructions, may cause harmful interference to radio communications. However, there is no guarantee that interference will not occur in a particular installation. If this equipment does cause harmful interference to radio or television reception, which can be determined by turning the equipment off and on, the user is encouraged to try to correct the interference by one or more of the following measures:

- Reorient or relocate the receiving antenna.
- Increase the separation between the equipment and receiver.
- Connect the equipment into an outlet on a circuit different from that to which the receiver is connected.
- Consult the dealer or an experienced radio/TV technician for help.

Caution

Changes or modifications not expressly approved by Digital Check could void your authority to operate this equipment.

Canadian Regulatory Label

CANICES-3（A）/NMB-3（A）.

Digital Check is a registered trademark licensed to Digital Check Corp. in the United States and other countries. QUANTUM is a registered trademark of Digital Check Corp. All other brands and products referenced in this document are acknowledged to be the trademarks or registered trademarks of their respective holders.

Contents

1 Product Introduction 5
2 Section 1 Setting up the Unit 5
Selecting a Place for the Unit 5
Need Help? 6
Unpacking the Box and Checking for These Items! 7-8
Installing the Inkjet Cartridge Option 9
Inkjet Cartridge Capacity 9
Connecting the Cables 9-10
3 Section 2 Operating the unit 11
Power On and Off 11
Status Lights 11
Pocket status Lights 12
Setting Up for Document Flow 12
Removing the Covers 13
Adjusting the Endorser Height 13-15
Document Preparation 15
Aligning Checks for Loading 16
Inserting Documents 17
Processing Documents (Document Flow) 18
Start/Stop Button 18
Removing Items from Pocket and Check Work 18
Stopped Document in Track Conditions 18
Clearing Stopped Items in Track 19
Using the Start/Stop Button to Move Stopped Items to a Pocket 19
Manually Remove Stopped Items from the Track 20-21
4 Section 3 Cleaning the Unit 22
Rapid Cleaning 22
Detailed Cleaning 22
Cleaning Supplies 23
Detailed Cleaning Sequence 24-32
5 Section 4 Ordering Replacement Items 33-34
6 Section 5 Solving Problems 35-36
Paper Clip/Staples/Debris in Track 36
All Issues 37-55

Tables

Table 3–1 Cleaning Supplies for Rapid and Detailed Cleaning 23
Table 3–2. QUANTUM DS Series Cleaning Kit.....23
Table 4–1. Replacement Items 34

Product Introduction

The QUANTUM DS® Series is a smaller version of a desktop reader/sorter for checks and documents. There are two styles: QDS20012-SYS and QDS20012-SYS -FE.
The differences between the two are as follows:
QDS20012-SYS –FE has front printing, and the front image sensor is before the front printer.
QDS20012-SYS –FE is available only in a 12-pocket version, while QDS20012-SYS has both a 12-pocket version and an 8-pocket version.

Section 1

Setting up the Unit

Selecting a Place for the Unit

- Indoor only.
- Flat, stable surface – minimum dimensions
  - QDS20012-SYS 51.1 inches (1300mm) wide x 13.8 inches (350 mm) deep.
- Quantum DS weight
  - QDS20012-SYS weighs 61.5 pounds (28 kg).
- Clearance
  - In front, sufficient to:
    - Turn the unit on.
    - Load and remove documents.
  - Above, sufficient to remove covers and access the track.
  - Between the sides of the unit and a monitor (if the unit is located next to a monitor) it is recommended to keep any electronic devices at least 12 inches (30 cm) or more from the unit to reduce interference with the magnetic ink character recognition (MICR) reader inside the unit.
  - In the rear, sufficient to connect the power cord (from the power supply), the USB interface cable, and protect those connections.
- PC or network connection available.
- An AC power outlet, 100-240 Volts AC, 50/60 Hz available.
  - The Quantum DS has auto-ranging power input and no voltage or frequency settings are required.
  - Power consumption = 330 Watts
- Adequate ventilation.
- Away from water/moisture/high humidity, high heat/direct sunlight, dust.
  - Operating temperature: 15 to 40° C (59 to 104° F)
  - Storage temperature: -20 to 60° C (-4 to 140° F)
  - Shipping temperature: -40 to 65° C (-40 to 149° F)

- Operating humidity: 20 to 85 % (non-condensing)
- Storage humidity: 5 to 95 % (non-condensing)

Caution
The Quantum DS unit may be susceptible to “burst” or “electrical fast transient” (EFT) noise entering the unit through the power cord. These types of noise signals are caused by large electrical equipment (such as heating and cooling units) connected to nearby electrical outlets. Burst or EFT noise may cause the Quantum DS to stop functioning, requiring the operator to restart the Quantum DS and its application(s).

If this occurs,

- Plug the Quantum DS into an electrical outlet on a different branch of the power distribution system where large electrical equipment is not connected to nearby outlets.
- Plug the Quantum DS into a line conditioning device or an uninterruptible power source).

Need Help?

Digital Check Help Desk 1-847-446-2285.

- Digital Check on the worldwide web (for general product information and training videos)

  www.digitalcheck.com

- Digital Check supplies and replacement items

  store.digitalcheck.com

Customers outside the United States, please contact your local distributor for parts, supplies, and service/repairs.

Unpack the Box and Check for These Items!

USB cable 	Do not plug a USB cable into the unit / PC yet! Check with a manager/administrator! Software must be loaded on the PC before a USB cable can be connected.
AC Power Cord 	125V/10A
CD 	Product software, firmware, and program
QDS Service Fixture(1 set) 	The fixture is used in the maintenance process to allow the user to rotate the device and access both the top and bottom. Please store it in a safe location.
Inkjet cartridge 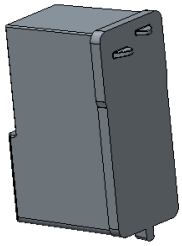	QDS20012-SYS uses one inkjet cartridge, and QDS20012-SYS-FE requires two inkjet cartridges.

Quantum DS unit	 QDS20012-SYS QDS20012-SYS -FE

Installing the Inkjet Cartridge

To install the inkjet cartridge, follow the instructions packed next to the inkjet cartridge pouch in the unit shipping box.

For additional/replacement cartridges, order the inkjet cartridge (822120984) from Digital Check, or your local distributor if outside the U.S. (see Section 4 of this guide).

Inkjet Cartridge Capacity

The operational life of the inkjet cartridge varies with:

- Endorsement application parameters:
  - Number of endorsement lines per document.
  - Number of characters printed per line.
- Character font selection.
- Print quality settings.
- Printing of graphics and/or logos.
- Document batch size.

The capacity of the inkjet cartridge can range from approximately 1,300,000 up to 5,300,000 characters, depending on the operational settings and workflow. It is recommended that the cartridge capacity be evaluated by the user in the actual printing environment to determine actual usage.

Connecting the Cables

Follow these steps to connect the cables to the unit. Refer to the following figures.

1. **Turn the unit OFF**

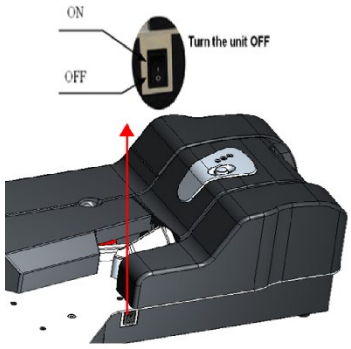

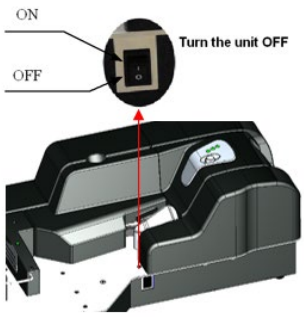

QDS20012-SYS QDS20012-SYS-FE

a. Connect the AC power cord to the unit.

QDS20012-SYS/QDS20012-SYS-FE

b. Install the software and drivers on the PC.

Note: The unit software and drivers must be loaded on the PC before connecting the USB cable from the unit to the PC.

c. Connect the USB cable.

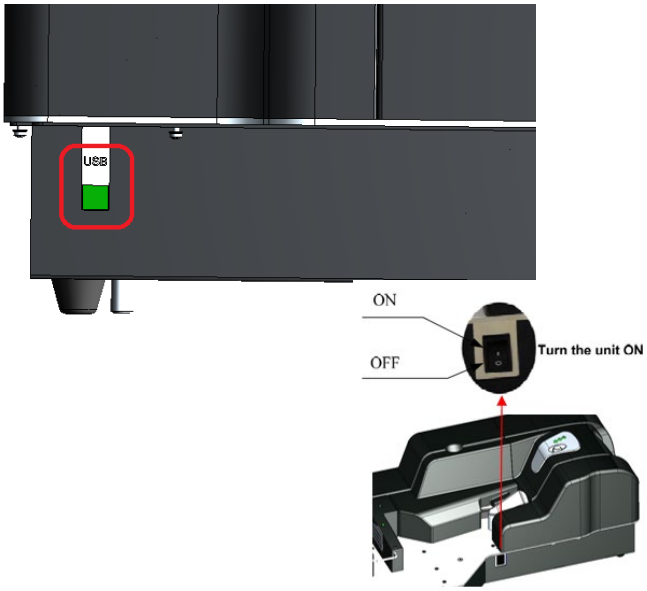

QDS20012-SYS/QDS20012-SYS-FE

2. Turn the unit ON

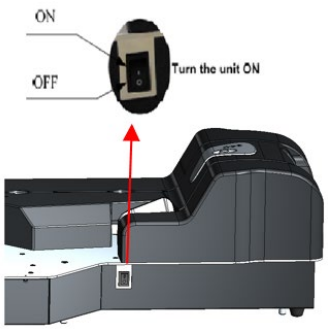

QDS20012-SYS QDS20012-SYS-FE

After the cables have been connected and the software has been installed on the PC, the unit is now ready for operation.

Section 2

Operating the unit

Power On and Off

1. Turn the unit ON or OFF using the switch on the right of the unit.
   a. Press “|” on the power switch to turn the unit ON.
   b. Press “O” on the power switch to turn the unit OFF.

QDS20012-SYS

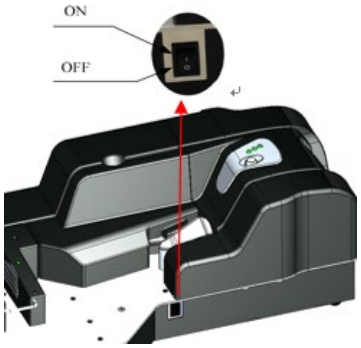

QDS20012-SYS-FE

2. The top status light on the unit should be solid green and the middle status light should blink lighter green. Refer to Section 5 if a problem occurs.

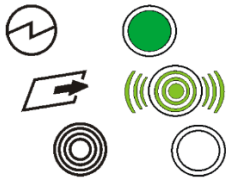

QDS20012-SYS/QDS20012-SYS-FE

Status Lights

Three lights on the top of the unit indicate the status of the unit and the software application that runs on the host PC. You should consult your application documentation for information on the meaning of the bottom light, the application status light. When lit, this light is always yellow (solid or blinking).

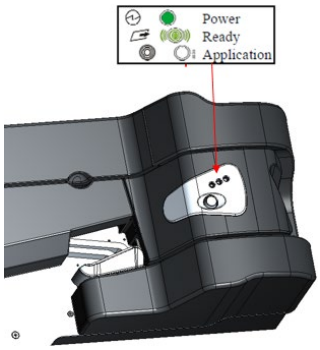

QDS20012-SYS

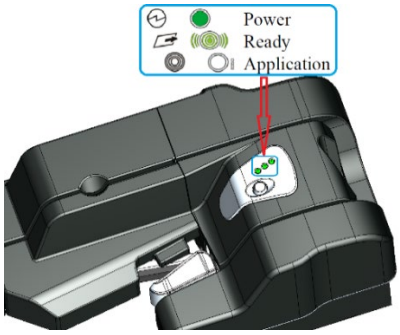

QDS20012-SYS-FE

The following table shows the status light colors, patterns/meanings, and operator actions.

Light Pattern	Meaning	Action
	Unit is powered on.	If necessary, prepare application to flow documents.
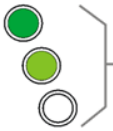	Unit is processing documents.	Load (more) documents into feeder bay.
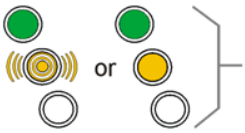	A problem has occurred (such as a jam, double document, or skewed document in the unit).	Check that documents are within specifications. See “Stopped Document in Track Conditions” later in this section.

Pocket status Lights

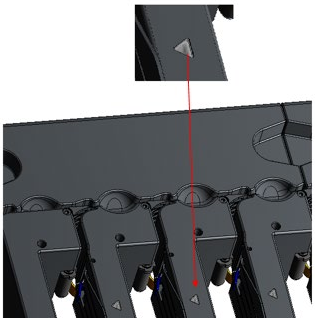

QDS20012-SYS/QDS20012-SYS-FE

Pocket status indicator light function as follows:

Green – normal
Orange – pocket full
Red - error

Setting Up for Document Flow

When you prepare to process documents, you should:

- Adjust the position of the check limiter.
- Remove the covers.
- Check the height position of the endorser housing.
- Replace the covers.

Adjust the Check Limiter

Adjust the position of the check limiter to match the length of the longest checks or papers in the batch you will process (if the items are longer than the pocket).

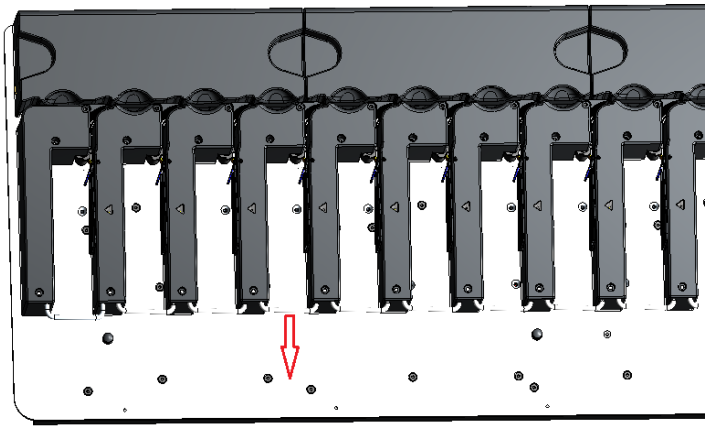

QDS20012-SYS/QDS20012-SYS-FE

Removing the Covers

The Quantum DS has several covers which can be removed directly.

1. Remove these covers. Grasp each cover and lift it straight up then off the unit.

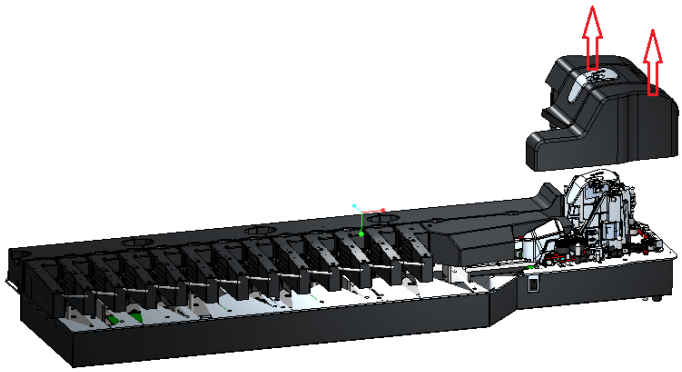

QDS20012-SYS

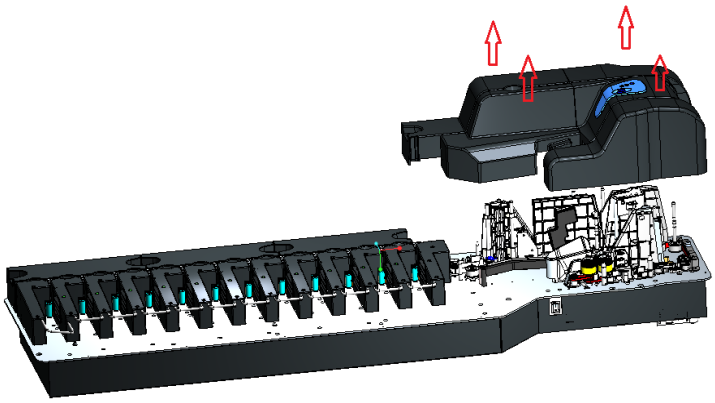

QDS20012-SYS-FE

Adjusting the Endorser Height

The endorser height can be manually adjusted to one of two (2) print positions.

1. Press the tab toward the cartridge to release it.

2. Slide the ink cartridge housing up or down to the desired height until it clicks into place.

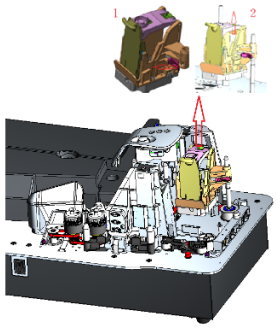

QDS20012-SYS

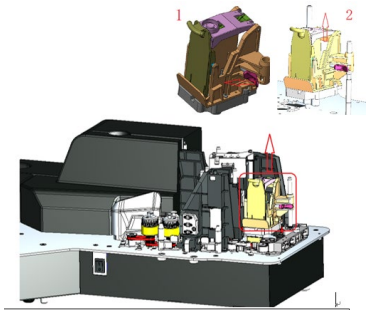

QDS20012-SYS-FE

Caution
When processing the smallest documents (minimum size for documents is 2.9 in. (73.66 mm) x 2.0 in. (50.8 mm)), the endorser top print position is too high to endorse properly. Check if the endorser print position is correct when feeding small documents.

3. Do not raise the endorser above the top print position. If you do, make sure the endorser cable is pushed back through the slot and underneath the base plate when you move the endorser back to a print position. There should be no loop or bulge in the cable above the base plate.

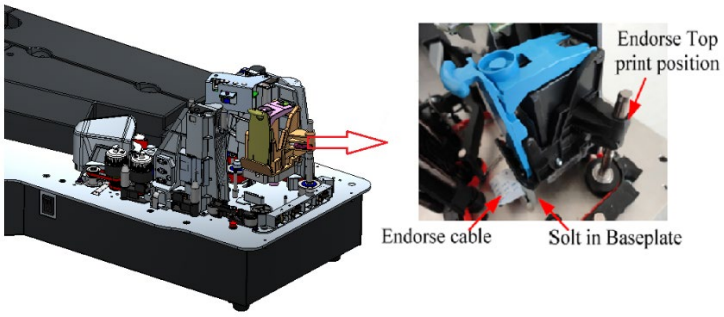

QDS20012-SYS

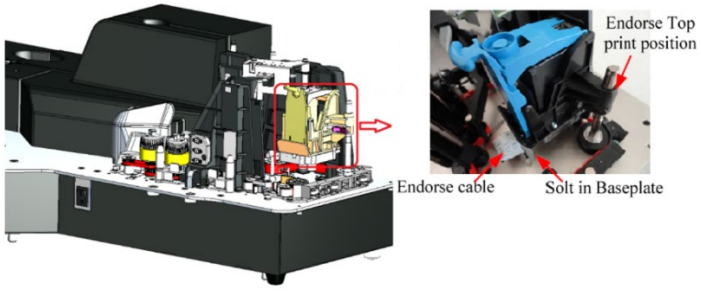

QDS20012-SYS-FE

4. Quantum DS-FE: The front print height is adjustable, and the front print inkjet cartridge is located behind the rear scan track and needs to be lifted up to the

Front outer Image cover for viewing. The adjustment method is the same as the rear side.

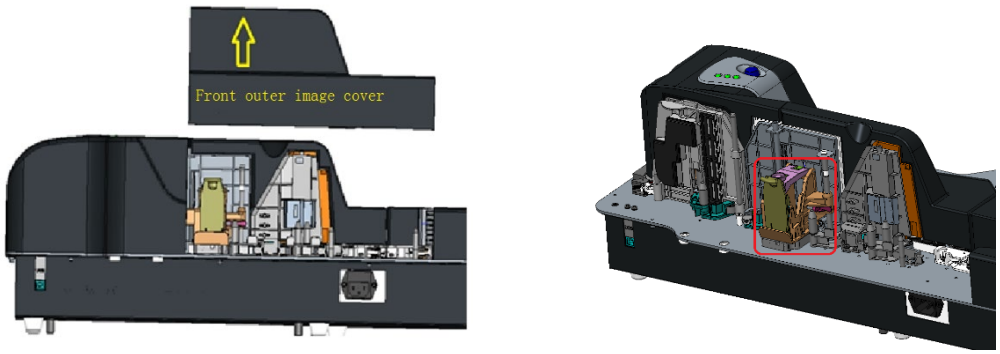

QDS20012-SYS-FE

Document Preparation

It is important to properly prepare documents for processing. Otherwise, unit performance may not be satisfactory. You should review documents for acceptable size and condition, and carefully follow the steps in this section to prepare documents.

1. Check for acceptable size.
2. Smooth, no creases, folds, curls, and dog-ear corners.

QDS20012-SYS/QDS20012-SYS-FE

3. Remove rubber bands, paper clips, staples, or foreign objects.

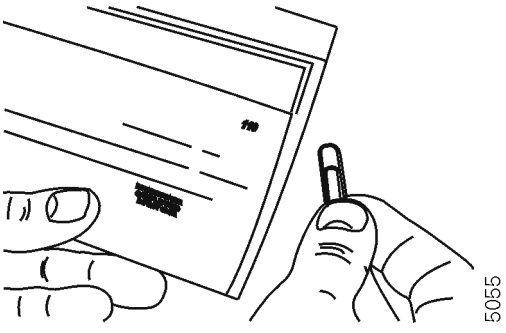

QDS20012-SYS/QDS20012-SYS-FE

4. Remove check stubs.

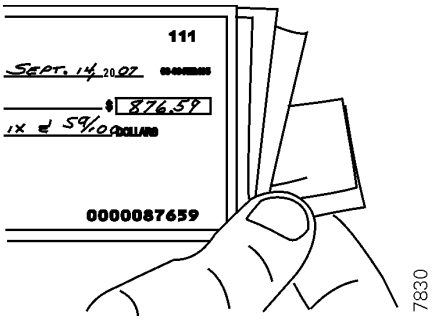

QDS20012-SYS/QDS20012-SYS-FE

a) Repair torn, damaged paper, or place each damaged item in a carrier envelope.

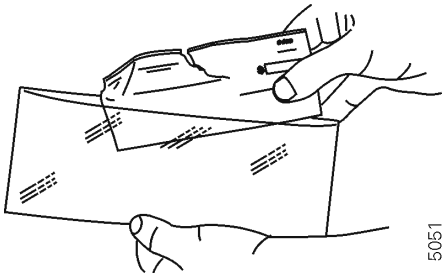

QDS20012-SYS/QDS20012-SYS-FE

b) Do not use tape to repair areas with code line or encoded amount information.

QDS20012-SYS/QDS20012-SYS-FE

Aligning Checks for Loading

1. Make sure to arrange checks so that printed sides face up, and all face the same direction.
2. The date line on checks should be in the upper right corner.

QDS20012-SYS/QDS20012-SYS-FE

3. Align checks on bottom and leading edges.

- When processing small quantities of documents, tap bottom/leading edges on a hard, flat surface until the entire bottom and leading edges of the documents are aligned.

  OR

- When operating in a higher volume, back counter environment, use of a document jogger to align the documents may be desirable.

On the unit, the check bottom and leading edges of the stack of items must align for satisfactory document feeding. Alignment of documents is very important, especially when feeding small documents.

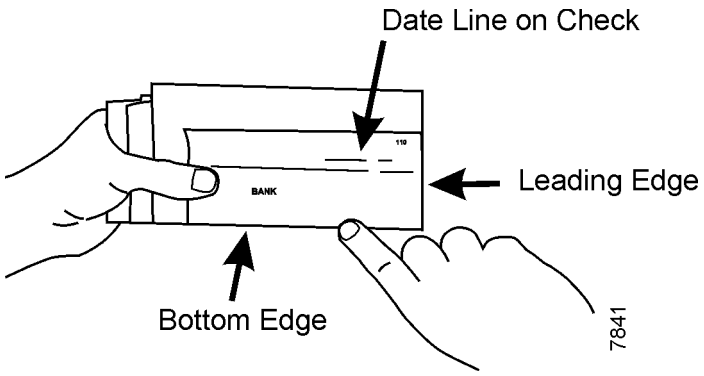

QDS20012-SYS/QDS20012-SYS-FE

Inserting Documents

- Insert items one at a time or in batches that fit easily in the feeder. The feeder has a capacity of up to 300 items, depending on thickness and condition.
- Wait for two green status lights.

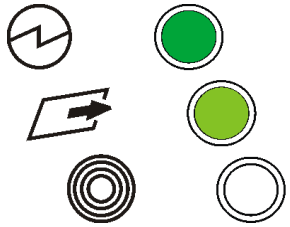

QDS20012-SYS/QDS20012-SYS-FE

- Slide documents forward to the end of the feeder bay - printed sides face the side of the unit, not the feeder flag.

Caution

If feed more than one item, do not slide or push items into the unit past the end of the feeder bay. Refer to the graphic printed on the cover to show the insertion point.

Processing Documents (Document Flow)

1. To initiate document processing, either use your application software user interface, or press and release the Start/Stop button.

   Note: *Start/Stop Button functions are dependent on your application. Refer to your application instructions.*

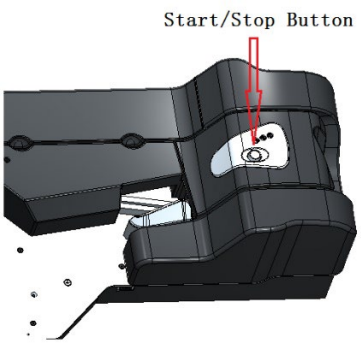

QDS20012-SYS

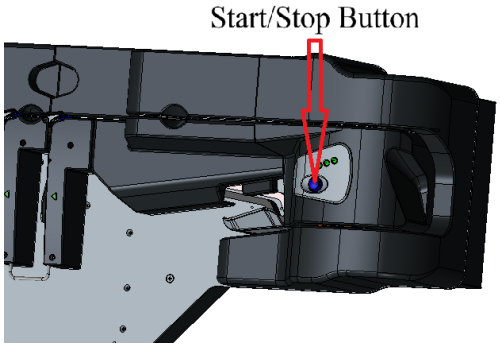

QDS20012-SYS-FE

2. To continue running more items, remove the remaining items from the feeder bay. Reinsert the items (and/or additional items) into the feeder bay. Press the Start/Stop button or use your application software interface to resume document processing.

Start/Stop Button

The Start/Stop button initiates document processing. Use the Start/Stop button to:

- Start or stop document flow.
- Restart document flow after a track stop (center status light is amber).
- Clear stopped items in the track. **Hold down the Start/Stop button for three seconds** to move the stopped item(s) in the track to a pocket (“flush the track”).

Removing Items from Pocket and Check Work

To prevent jams, you should remove items from the pocket when the pocket is nearly full. Pocket capacity is up to 200 items, depending on thickness and condition. Verify that endorsements are clearly printed, and that image quality is acceptable (if the application allows image viewing).

Stopped Document in Track Conditions

If an item stops in the track, or does not fully enter a pocket, it must be removed from the track before documents can flow again.

Note: *When this happens, you must check your application documentation for information on clearing stopped items and perform the necessary recovery steps.*

The item may have stopped in the track due to one or more of the following:

- Unacceptable size
- Creases, folds, curls, or dog-eared corners.

- Rubber bands, paper clips, staples, or foreign objects.
- Check stubs or adding machine tape.
- Torn or damaged paper.
- Missing or misaligned inkjet cartridge when endorsement is enabled.

Prepare items properly for flow to prevent or minimize document stops in the track. See "Document Preparation" earlier in this section.

If there are repeated problems with documents moving through the track, see Section 5 of this guide, "Jams or Unexpected Document Stops."

If a document stops or an exception condition occurs, the Exception Handler will pop up on the track controller screen. Follow the Exception Handler's instruction to clear the exception.

Clearing Stopped Items in Track

When an item stops in the track, there are two methods to clear the track:

- Use the Start/Stop button to move the item to a pocket.
- Manually remove the item from the track.

Using the Start/Stop Button to Move Stopped Items to a Pocket

You should first try to flush the stopped item from the track using the **Start/Stop button**.

1. **Press and hold down the Start/Stop button for three (3) seconds** to move the item through the track to the pocket(s). Leave the items in the pocket(s) once the track is cleared.

   Note: *Start/Stop Button functions are dependent on your application. Refer to your application instructions.*

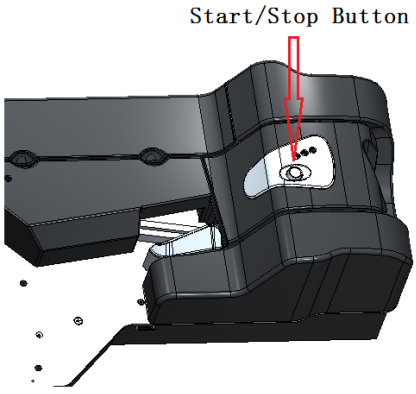

QDS20012-SYS

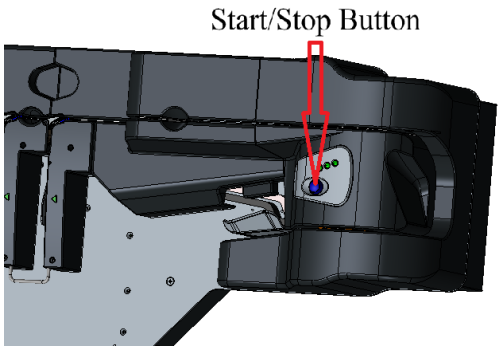

QDS20012-SYS-FE

2. **If an item remains in the track after holding down the Start/Stop button for three seconds, you must manually remove the item from the track.** You should be able to remove the stopped items without removing the covers.

Whether you remove the covers or not, keep items in the same order in which they were inserted for processing.

Manually Removing Stopped Items from the Track

1. Remove items starting at the pocket area first, and work back to the feeder area.

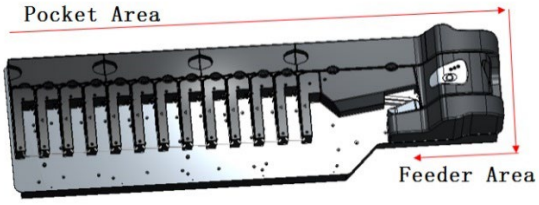

QDS20012-SYS

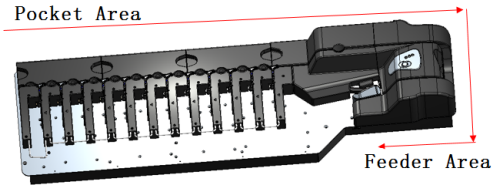

QDS20012-SYS-FE

2. To remove items inside the unit, remove covers if necessary and check the location of the stopped item in the track.
   a. For items that are stopped on the track on the pocket side, pull the item out toward the back or front of the pocket.

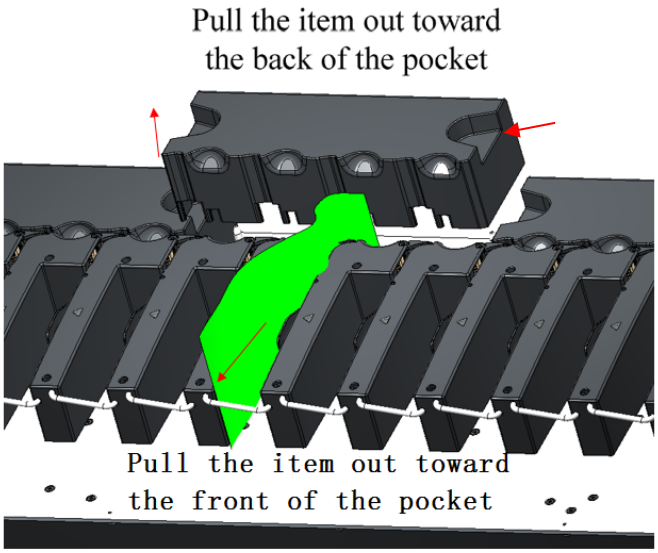

QDS20012-SYS/QDS20012-SYS-FE

   b. If an item has stopped in the track at the rear of the unit, pull it out of the unit.

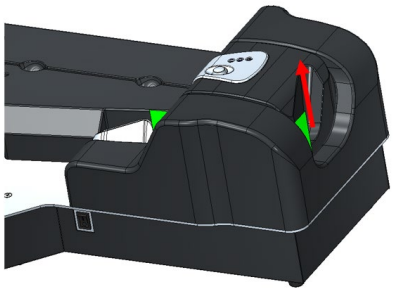

QDS20012-SYS

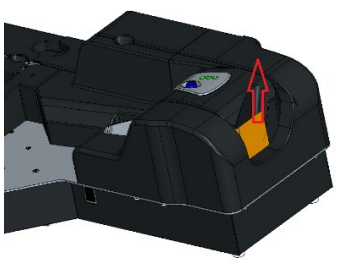

QDS20012-SYS-FE

c. For items stopped on the feeder side of the unit, pull the item out toward the rear of the unit.

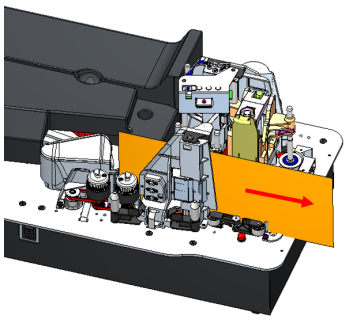

QDS20012-SYS

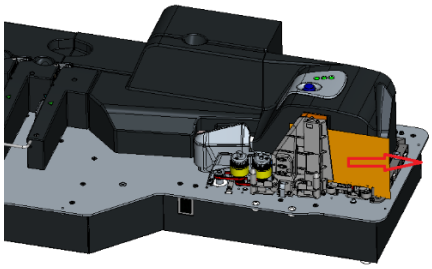

QDS20012-SYS-FE

3. Remove the unit covers if they were taken off the unit to remove items from the track.
4. Consult your application documentation for the necessary recovery steps on reinserting and feeding items that were removed from the unit/track.

Section 3

Cleaning the Unit

The processing of paper documents will generate debris over time, such as paper dust, staples, or other foreign matter that will require operator cleaning in order to maintain peak operating performance of the unit.

The QUANTUM DS has been designed to make cleaning easy to perform, and it is recommended that cleaning operations be performed by the operator on an “as needed” basis.

This section identifies which cleaning procedures are required, illustrates how to properly complete these procedures, and describes the cleaning supplies. Digital Check has, through the Digital Check webstore (store.digitalcheck.com), a variety of cleaning supplies and replacement items specifically designed to maintain the QUANTUM DS units.

Two cleaning procedures are recommended for use with the QUANTUM DS: a “rapid cleaning” and a “detailed cleaning” procedure.

Rapid Cleaning

To perform the rapid cleaning procedure, run the check scanner cleaning card through the unit following the instructions on the card envelope. As the cleaning card travels through the unit it contacts and cleans paper handling surfaces and components inside the unit, without removing the unit covers or track walls.

Using the rapid cleaning procedure saves operator time and may reduce the need to perform the detailed cleaning procedures.

Detailed Cleaning

Detailed cleaning procedures target specific critical components and devices inside the QUANTUM DS unit. Detailed cleaning procedures are implemented when specific performance and/or operational problems occur.

The main areas of the unit require detailed cleaning are the following:

- Track (paper path).
- Front and rear image glass.
- Rear image camera removable wall.
- Fixed rear image camera wall.
- Endorser cartridge and cartridge housing.

Cleaning Supplies

QUANTUM DS cleaning supplies can be ordered from Digital Check at 1-847-446-2285, or go to https://store.digitalcheck.com.

Table 3-1 lists all of the cleaning supplies that are available for the QUANTUM DS.

Table 3–1 Cleaning Supplies for Rapid and Detailed Cleaning

Procedure	Supplies and Description	Supply Order No.
Rapid Cleaning	Check Scanner Cleaning Card (package of 15)	IS0033
Detailed Cleaning	Track Clearing Spatula (package of 5)	750381907
	Image Glass Cleaning Pads, pre-saturated with isopropyl alcohol (package of 80)	751804907
	Micro-duster (box of four 10 oz. cans)	750501900
	Cotton Wiping Cloths (6 in. x 6 in.) (box of 150)	82276465-000

The QUANTUM DS Cleaning Kit (supply order number 756190992) shown in Table 3-2 provides a selection of cleaning supplies for the QUANTUM DS in various quantities. All of the items in the cleaning kit can be ordered separately although not in the same quantities shown for this kit.

Table 3–2. QUANTUM DS Cleaning Kit

Item	Quantity
Check Scanner Cleaning Card	15
Image Glass Cleaning Pads, pre-saturated with isopropyl alcohol	80
Micro-duster	1
Cotton Wiping Cloths	25

Detailed Cleaning Sequence

Follow these procedures, in the order that they are presented in this section, to clean the unit:

- Turn the unit off.
- Remove the direct removable cover without tools.
- Remove the front image camera removable wall.
- Remove the rear image camera removable wall.
- Clean the rear image camera removable wall (if the ink pad fully replaces the rear image camera removable wall).
- Remove staples, paper clips, and visible debris from the track.
- Blow air along the entire track (paper path) with a micro-duster.
- Clean the front and rear image glass and the fixed rear image camera wall.
- Clean ink off the endorser cartridge and cartridge housing (as needed to maintain print quality – omit this procedure if print quality is acceptable).

Turning Unit Off

WARNING
Turn the unit off as shown in the following illustrations.

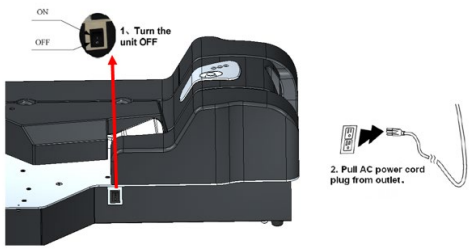

QDS20012-SYS

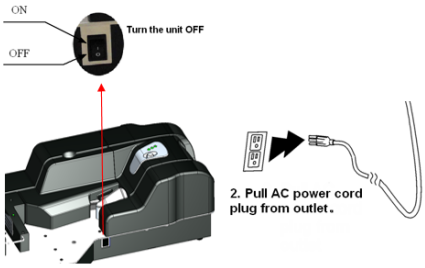

QDS20012-SYS-FE

Remove the direct removable cover without tools.

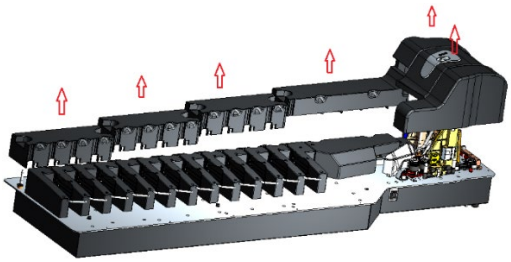

QDS20012-SYS

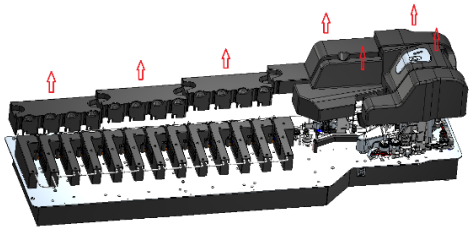

QDS20012-SYS-FE

Removing the front image camera removable wall

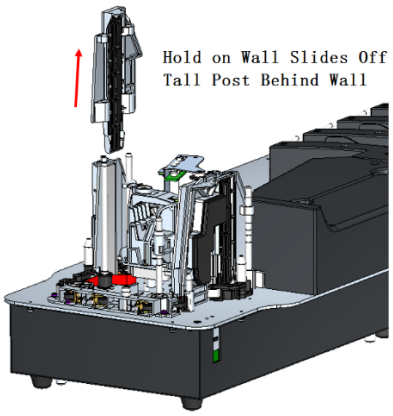

QDS20012-SYS

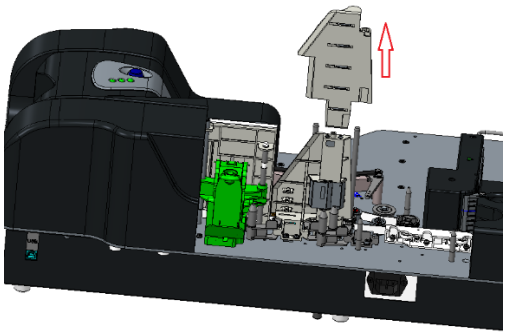

QDS20012-SYS-FE

Removing Rear Image Camera “Removable Wall”

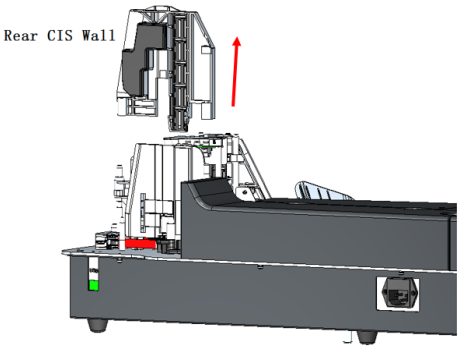

QDS20012-SYS

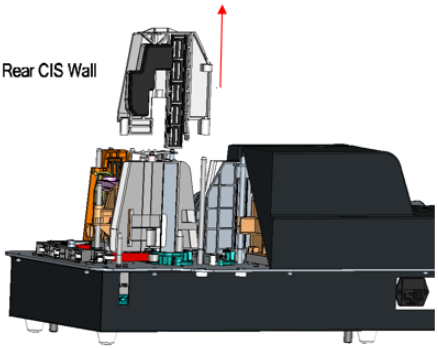

QDS20012-SYS-FE

Cleaning Rear Image Camera “Removable Wall”

1 Wipe off entire wall with cleaning Pad 75-1804-907 to remove any accumulated debris and/or ink.

Take care that cleaning pad does not pick up ink from ink pad.

2 Do not wipe inside window or on ink pad!

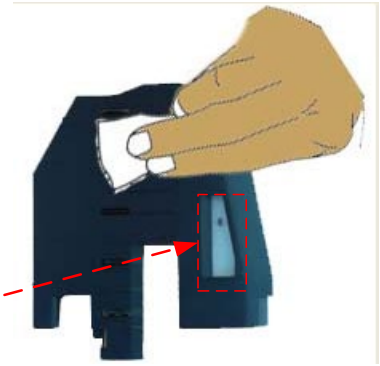

QDS20012-SYS/QDS20012-SYS-FE

Removing Staples, Paper Clips, and Visible Debris from the Track

Caution
Metal objects such as paper clips and staples that fall underneath the metal base plate may damage the unit. Before using the micro-duster to blow air along the paper path, inspect the track for such items as staples and paper clips and remove them from the unit.

Use the track clearing spatula to clear the track.

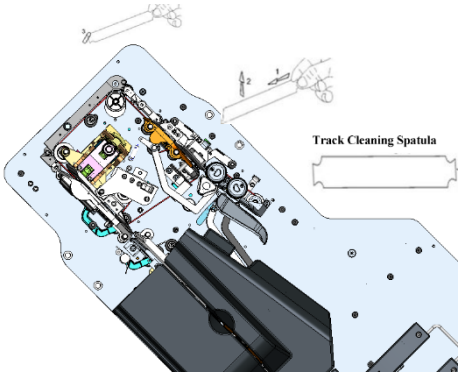

QDS20012-SYS/QDS20012-SYS-FE

Blow air along Entire Track (Paper Path) with Micro-duster

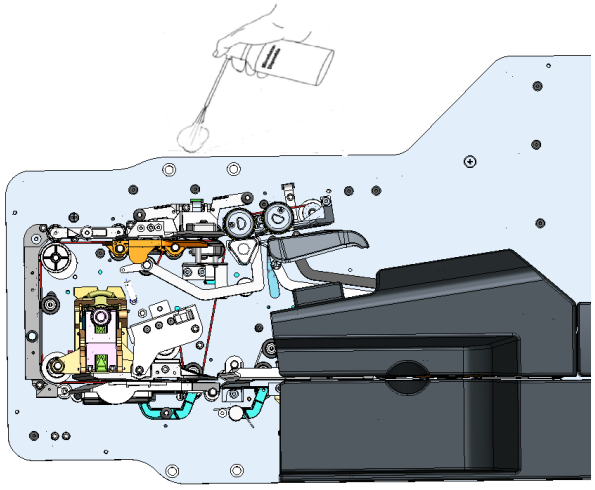

QDS20012-SYS/QDS20012-SYS-FE

Cleaning Front and Rear Image Glass and Fixed Rear Image Camera Wall

Note: *Use a new, unused Cleaning Pad 751804907 for this cleaning procedure.*

1. Clean the entire image glass surface by wiping with Cleaning Pad 751804907 whenever document images contain black horizontal streaks.

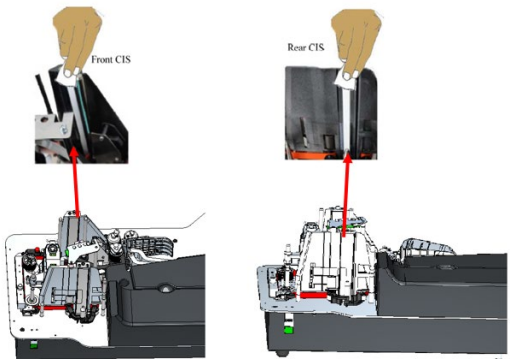

QDS20012-SYS

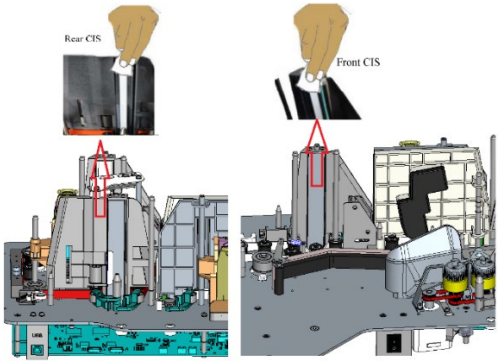

QDS20012-SYS-FE

2. Clean the fixed rear image camera wall by wiping with Cleaning Pad 751804907. Clean the area indicated in the picture below, **but do not wipe with the pad inside the small rectangular cutout in the image wall or wipe the image glass again.**

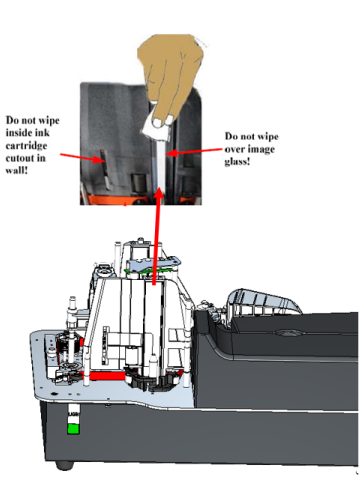

QDS20012-SYS

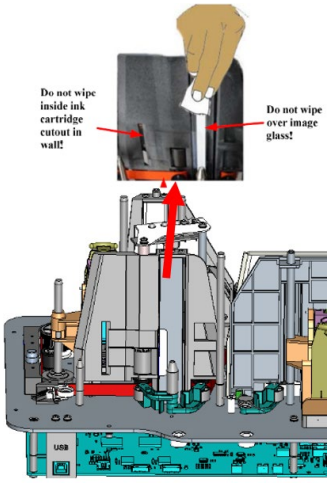

QDS20012-SYS-FE

Cleaning Ink Off the Endorser Cartridge and Cartridge Housing

If the unit is producing acceptable print quality for the endorsement, it is recommended that this portion of the cleaning procedure – which cleans the ink cartridge print head – be omitted. However, if the unit exhibits degraded print quality, it is recommended that the following cleaning procedure be performed on the ink cartridge print head and ink cartridge housing.

1. Remove the cartridge from the unit.

   a. On unit, do the following to remove the cartridge.

      - Press down on the cartridge housing latch to open the cartridge housing.

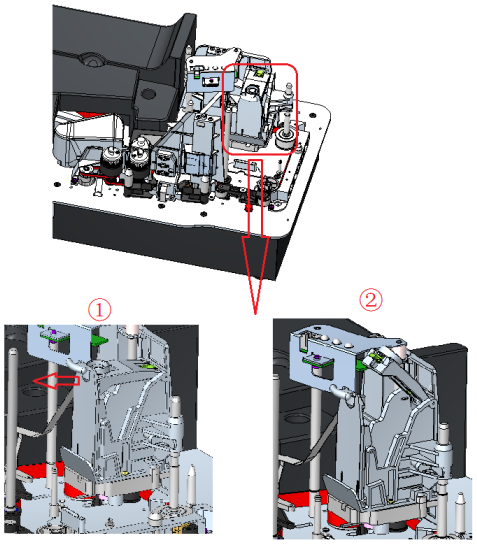

QDS20012-SYS

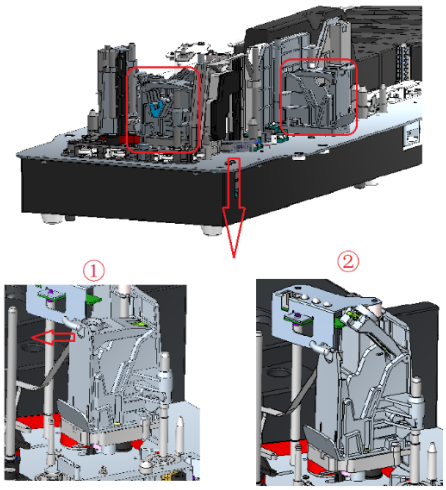

QDS20012-SYS-FE

- Pull the cartridge up and out of the housing.

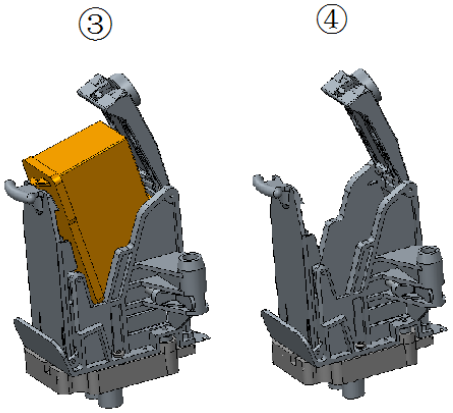

QDS20012-SYS/QDS20012-SYS-FE

2. Dampen a clean, lint-free cloth with a small amount of water.

QDS20012-SYS/QDS20012-SYS-FE

Caution

The cloth should not be too wet as water must not drip into or remain on the unit. **When cleaning the print head, do not use alcohol-based or other cleaning solutions.**

3. Wipe any ink that may be present off the cartridge contacts inside the cartridge housing.

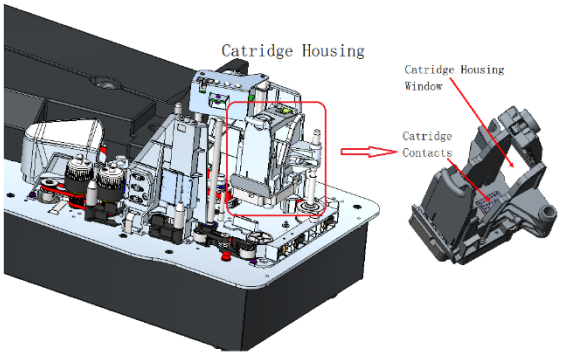

QDS20012-SYS

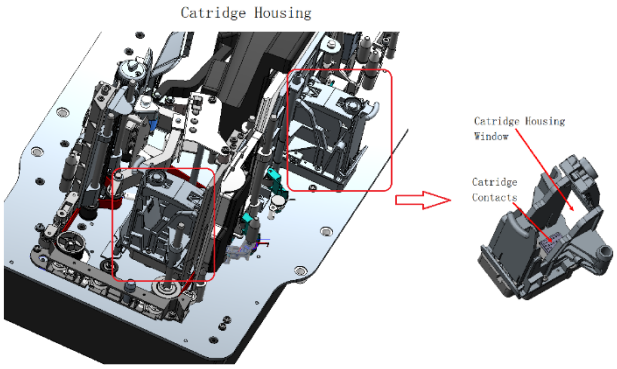

QDS20012-SYS-FE

4. The front print cartridge is removed. Perform the following steps on the unit to remove the ink cartridge and wipe it by pressing the reverse print cartridge cleaning position.
5. Wipe any ink that may be present off the window inside the cartridge housing.
6. Dampen a clean, lint-free cloth with a small amount of water.

   Note: *The cloth should not be too wet as water must not drip or remain on the unit.*

> **Caution**
>
> **Do not use alcohol to wipe the cartridge nozzles.** This will cause damage.
>
> **Do not use the Image Glass Cleaning Pads** from Digital Check (751804907) to wipe the cartridge nozzles. These pads are pre-saturated with isopropyl alcohol that will cause damage to the cartridge.

7. Hold the cloth gently against the cartridge nozzles for three seconds. Then, wipe the nozzles in one direction only, **UP**, as shown here.

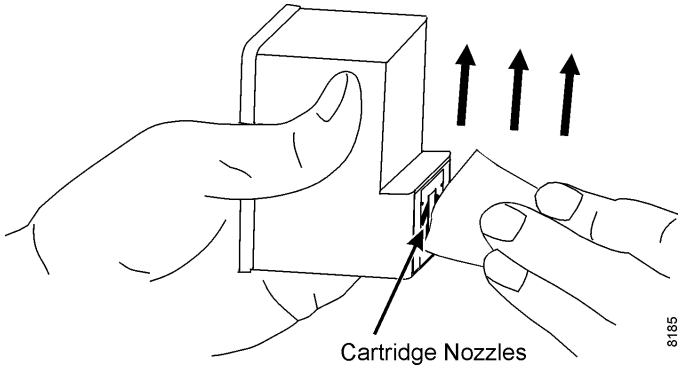

QDS20012-SYS/QDS20012-SYS-FE

8. Use a clean section of the cloth or moisten another lint-free cloth with a small amount of water. Hold the cloth gently against the cartridge contacts on the bottom of the cartridge for three seconds. Then, wipe the contacts in one direction only, **sideways**, as shown here.

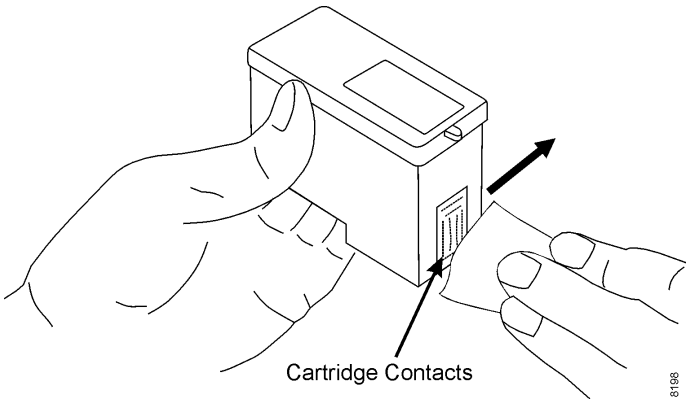

QDS20012-SYS/QDS20012-SYS-FE

9. With a clean section of the cloth, or another lint-free cloth dampened with a small amount of water, repeat steps 6 and 7.
10. Allow the cartridge nozzles and contacts to dry completely.

> **Caution**
>
> To eliminate any possibility of damage to the cartridge, **it is recommended that the unit be turned off before you insert the cartridge back into the cartridge housing.**

11. Insert the cartridge back into the cartridge housing. **Make sure that it is pushed in completely.**

On the unit, place the cartridge back inside the housing assembly and push it down into place.

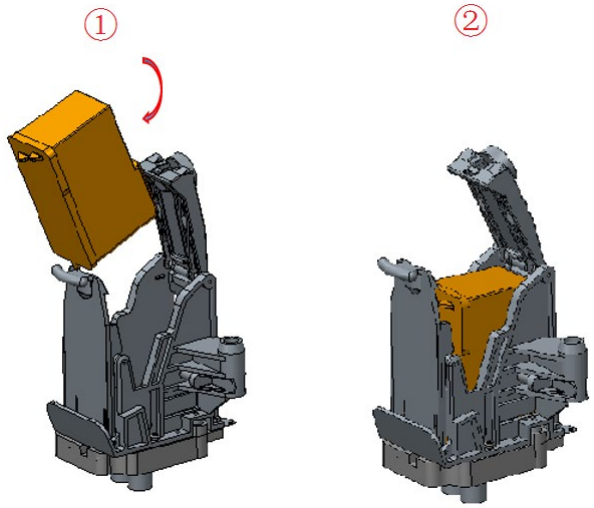

QDS20012-SYS/QDS20012-SYS-FE

Press the top of the cartridge housing assembly down until it is latched and closed.

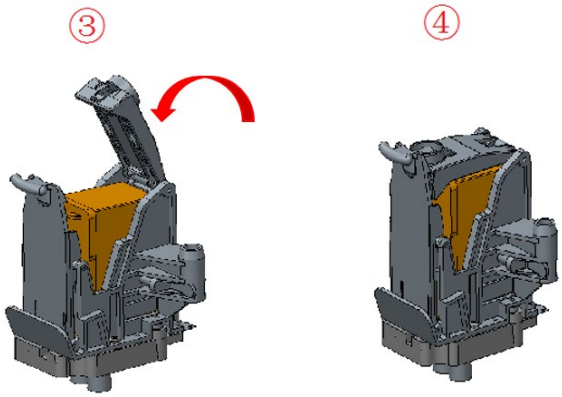

QDS20012-SYS/QDS20012-SYS-FE

12. If print quality does not improve, repeat steps 1 through 10 of this procedure one more time.
13. The front print recovery form is the same as the rear print one.

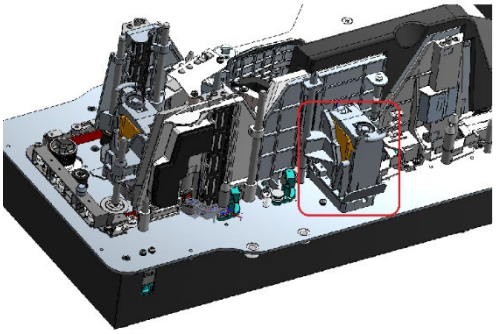

QDS20012-SYS-FE

14. If print quality still does not improve after two cleanings, the cartridge may be empty or defective. Replace the cartridge.

Section 4

Ordering Replacement Items

A number of the components within the QUANTUM DS, such as the rear endorser, have consumable items associated with their normal operation. Since the QUANTUM DS moves paper documents through the unit track using rollers and belts, over time some components may exhibit wear which may lead to reduced unit performance.

This section provides information on consumables and replacement items available for the QUANTUM DS products. Most replacement items come with installation instructions to guide the operator on the proper replacement procedure, including the following items:

- Inkjet cartridge.
- Rear image camera removable wall.
- Feeder kit.

The Digital Check Store website offers a variety of certified replacement parts to keep the QUANTUM DS operating at a high level of performance. Additionally, a limited number of parts are available to address incidents involving accidental damage and/or loss.

- Replacement items can be ordered from Digital Check at 1-847-446-2285, or by visiting store.digitalcheck.com.

Table 4-1 shows the QUANTUM DS replacement items and supply order numbers.

QDS20012-SYS

QDS20012-SYS-FE

Table 4–1. Replacement Items

Description	Supply Order No.
Inkjet Cartridge Replace the inkjet printing cartridge when it stops printing. See “Inkjet Cartridge Capacity” in Section 1. The capacity of the inkjet cartridge can range from approximately 1,300,000 up to 5,300,000 characters depending on the operational settings and workflow.	822120984
QDS20012-SYS has Rear CIS Press Assembly to collect waste ink, and QDS20012-SYS-FE has Rear CIS Press Assembly and Ink Catcher Wall to collect waste ink. When the waste ink collection part is full, relevant components need to be replaced.	82275247-000(QDS20012-SYS/ QDS20012-SYS-FE) 82276153-000(QDS20012-SYS-FE)
Feeder Rollers and Separator Assembly Includes: • Two feeder rollers • One separator assembly – triangle shape Replace worn separator assembly if the unit experiences excessive double-feed items. Expected life of the feeder rollers and separator assembly is up to one-half million items depending on the quality of the documents.	750850920
Feed Tire Kit Includes: • Two feeder tires • One separator belt	750306904
Separator Tire Kit Includes: 25 separator belts	750489908
AC Power Cord Order by contacting the Digital Check Help Desk at 1-800-DIGITALCHECK (1-800-287-7684). Specify style number B25-LC. A representative will assist you in determining the correct type of plug for your country.	—
USB2.0 cable, A male to B male,3 meter	CA0049
Quantum DS Service Fixture – for rotating the machine top to bottom during maintenance	82275387-000

Section 5

Solving Problems

Although infrequent, problems sometimes occur due to these conditions in the unit: paper jams or stops, multiple document feeding, and debris in the track. When such a problem occurs, the light pattern on top of the unit is as shown here:

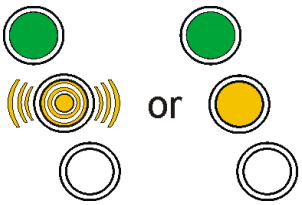

QDS20012-SYS/QDS20012-SYS-FE

Note: *You should consult your application documentation for information on the meaning of the bottom light, the application status light. When lit, this light is always yellow (solid or blinking).*

It is important to properly prepare documents for processing (as described in Section 2) to reduce or eliminate exception conditions that may result in decreased unit performance. Check these documents at acceptable size and condition, and ensure that the following common document defects have been corrected prior to processing:

- Creases, folds, curls, and dog-eared corners.
- Rubber bands, paper clips, staples, or foreign objects in the track.
- Check stubs and adding machine tape in the document stack.
- Torn, damaged paper, or a damaged item that has not been placed in a carrier envelope.

It is recommended that documents should be correctly aligned before being inserted into the unit. See Section 2 for details regarding proper document preparation and loading procedures.

The unit must be maintained as shown in Section 3 to ensure optimum paper handling and operation.

Possible operational problems that can occur when adequate document preparation is not performed, or when the unit is not properly maintained, are listed below:

- Paper clip/staples/debris in track.
- Power supply (including unit not plugged in properly, bad AC power outlet).
- Communications/connections (USB cable or software driver issues).
- Unusual noises (during paper feed or travel through unit).
- Indicators/controls (status lights or Start/Stop button).
- Jams or unexpected document stops (incorrect feeding).
- Feeder (incorrect feeding, double-feeds, skew).
- Reader (MICR/optical reader rejects).
- Image (quality or skew).
- Endorser (print issues – blurry, light, or no print, ink spots, lines, or streaks).
- Pocket (paper buckling or jamming, poor stacking).
- Parts (cracked or broken covers).

Paper Clip/Staples/Debris in Track

- Use the check scanner cleaning card to clean the track.
- Use the track clearing spatula to clear the track.
- If helpful, take out the removable front and rear image camera walls.

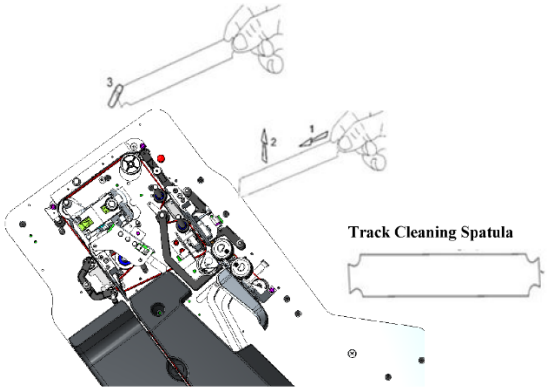

QDS20012-SYS

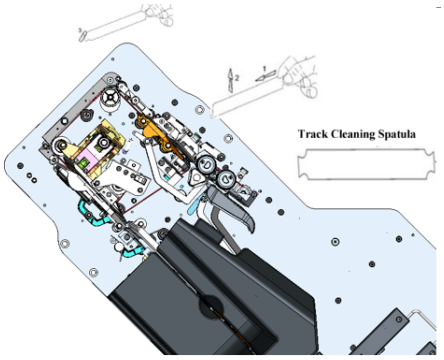

QDS20012-SYS-FE

All Issues

Communications/Connections

Symptom	Possible Cause	Solution
Unit does not connect to host PC or a network	Incorrect cable type or defective cable.	Ensure USB 2.0 cable in use, less than 5 meters (~16ft). Unit arrived with USB 2.0 cable 3 meters (~6ft) long.
	Excessive USB cable length.	USB 2.0 cable should not exceed 3-meter (~10ft) length.
	Host PC has lost, or could not establish, a USB connection with the QUANTUM DS unit.	Turn off the QUANTUM DS style and leave the PC powered on. Wait 5 seconds and then turn the QUANTUM DS unit back on. Listen for a “chime” on the host PC, indicating that the host PC has established a new USB connection with the QUANTUM DS.
	Software driver missing, corrupt, or not loaded.	Monitor software driver using Device Manager. Uninstall/reinstall driver as needed.

Communications/Connections (continued)

Symptom	Possible Cause	Solution
	PC firewall is blocking the network connection.	Follow configuration instructions for PC and/or firewall software.
“Lost Connection” - USB disconnection during idle periods.	Outdated software.	Contact application provider to ensure latest version software in use.

Unusual Noises

Symptom	Possible Cause	Solution
Noise while trying to feed paper.	Dirty/worn feeder rollers.	Clean or replace feeder rollers.
Clicking noise as papers travel around the paper path.	Obstruction in paper path.	Inspect paper path, remove debris. Ensure front/rear image camera removable walls and inner and outer top covers are properly positioned/seated.

Indicators/Controls

Symptom	Possible Cause	Solution
No top green light on top of unit.	Multiple causes.	See “Power Supply” conditions.
Papers do not feed when Start/Stop button pressed.	Start/Stop button held down too long.	Press/tap Start/Stop button momentarily to start feeding paper.
Unit makes noises but won’t feed paper.	Debris prevents paper from moving through the unit.	See “Feeder.”
	Application has not started correctly.	Restart application.

Jams or Unexpected Paper Stops

Symptom	Possible Cause	Solution
Items do not feed correctly.	Multiple causes.	See “Feeder.”
Items stop suddenly and have leading edge damage.	Debris/obstruction in paper path.	Examine paper path to locate small bits of paper, tape, staples, etc. Remove debris gently using track clearing spatula 750381907.

Feeder

Symptom	Possible Cause	Solution
Items do not feed correctly.	When the Start/Stop button is pressed, the feeder can be heard trying to feed paper, but the blue-topped feed rollers don't turn.	Swap the two feed rollers. Clean or replace them if problem persists.
	The feeder runs but the unit belt does not move.	Examine paper path to ensure belt has not come off a roller or is not jammed by debris. Call for service if belt is broken or cannot be moved by hand.
	When the Start/Stop button is pressed, there is no sound from the feeder.	If problem exists using other applications the unit requires repair.
More than one document is fed (item double-feeds).	Inadequate paper preparation before feeding items.	Ensure items are properly jogged, aligned, and loaded correctly into the feeder bay.
Items skew as they feed.	Inadequate document preparation before feeding items.	Ensure documents are properly jogged, aligned, and loaded correctly into the feeder bay.
	Incorrect document position/ insertion for manual feed.	When manually inserting documents, the entire bottom edge of the document must contact the floor of the track while you push the document forward into the unit.

Feeder (continued)

Symptom	Possible Cause	Solution
False "Feeder Empty" messages.	Documents are not properly loaded in feeder bay.	Documents should be jogged then loaded into feeder bay with leading edge of paper stack touching end of feeder bay.
	Dirty feeder sensor.	Blow air with Micro-duster through the paper path – where feeder bay touches unit.
	Defective feeder sensor.	Call for service on unit.
Double document stop message with single item in track. (False double document.)	Outdated software.	Contact application provider to ensure latest version software in use.
	Application; application settings.	Ensure that the application is capable of (and settings are correct for) automatic document feed.

Symptom	Possible Cause	Solution
Automatic feeder flag does not close.	Software/hardware synchronization.	Close the application. Turn the unit off and then on. Restart the application.
	Application; application settings.	Ensure that the application is capable of (and settings are correct for) automatic feeder flag.

Feeder (continued)

Symptom	Possible Cause	Solution
Symptom	**Possible Cause**	**Solution**
Automatic feeder flag does not close.	Dirty feeder sensor.	Blow air with Micro-duster through the paper path – where feeder bay touches unit.
	Defective feeder sensor.	Return unit for service.
	Broken belt.	Call for service of unit.
Automatic feeder flag does not open.	Software/hardware synchronization.	Close the application. Turn the unit off and then on. Restart the application.
	Application; application settings.	Ensure that the application is capable of (and settings are correct for) automatic feeder flag.
	Dirty feeder sensor.	Blow air with Micro-duster through the paper path – where feeder bay touches unit.
	Defective feeder sensor.	Call for service of unit.
	Broken belt.	Call for service of unit.

Reader

Symptom	Possible Cause	Solution
The magnetic and/or optical readers have excessive reject rates.	Checks have poor print quality.	Internal items (like cash tickets or batch headers) should be replaced with a fresh supply. If possible, ask document or check provider to correct print quality problems.

	Inadequate document preparation.	Ensure documents are properly jogged, aligned, and loaded correctly in the feeder bay so items are presented properly to the read head.
	Incorrect reader font and/or incorrect reader configuration settings.	Ensure that the software application settings match the actual reader configuration. Ensure that the correct reader font is used.
	Staple/debris near reader.	Inspect reader area for staple on magnet or debris lodged at magnetic head, remove if found. The following picture shows the location of the magnetic head in the unit.

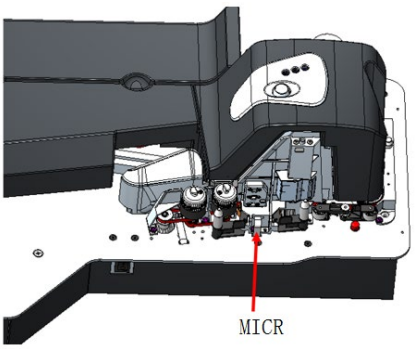

QDS20012-SYS

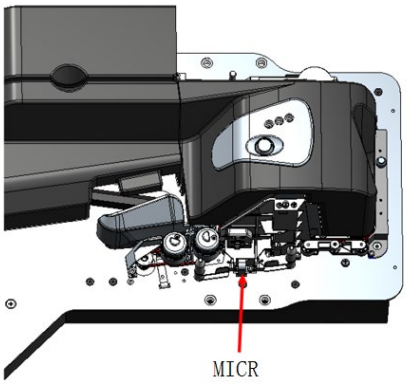

QDS20012-SYS-FE

Image

Symptom	Possible Cause	Solution
Images are skewed.	Multiple causes.	See “Feeder” – “Items skew as they feed.”
Dark horizontal streaks on all images.	Dirt or ink on image glass.	Perform or repeat the cleaning tasks described in Section 3 – wipe the front and rear image glass clean. Run the check scanner cleaning card through the track. Clean the track walls.
	Ink accumulation around cartridge housing window.	Clean the area around the cartridge housing window. See Section 3 for cleaning procedures.

	Ink accumulation around window in rear image camera removable wall due to a fully saturated built-in ink pad in the wall.	Clean both the fixed and removable rear image camera walls. See Section 3 for cleaning procedures. Replace the rear removable wall with built-in ink pad. See Section 4 for information on ordering the rear image camera removable wall with built-in ink pad.

Endorser

Symptom	Possible Cause	Solution
Blurry or light print.	Ink accumulation on inkjet cartridge nozzles or contacts.	Clean the inkjet cartridge nozzles and contacts. See Section 3 for cleaning procedures.
	Inkjet cartridge out of ink, or low on ink.	Replace the inkjet cartridge. See Section 4 for information on ordering a new cartridge.
	Print quality level setting is too low.	Use a higher print density setting (which will use more ink) if available.
Light print after inkjet cartridge is cleaned.	Inkjet cartridge out of ink.	Replace the inkjet cartridge. See Section 4 for information on ordering a new cartridge.
	Print quality level setting is too low.	Use a higher print density setting (which will use more ink) if available.
No print.	Inkjet cartridge out of ink.	Replace the inkjet cartridge. See Section 4 for information on ordering a new cartridge.
	Ink accumulation on inkjet cartridge nozzles or contacts.	Clean the inkjet cartridge nozzles and contacts. See Section 3 for cleaning procedures.
	Endorsement not enabled.	Verify that the applications settings are correct for endorsement.
Unusually large ink spots on the back of exception items.	Paper flow started while an exception item was left in the endorser area.	Eject paper stopped in the track during processing.

Excessive ink spots or horizontal lines of ink on the back of processed documents.	Ink accumulation on inkjet cartridge nozzles or contacts.	Clean the inkjet cartridge nozzles and contacts. See Section 3 for cleaning procedures. Replace the inkjet cartridge. See Section 4 for information on ordering a new cartridge.

Endorser (continued)

Symptom	Possible Cause	Solution
Excessive ink spots or horizontal lines of ink on the back of processed documents.	Ink accumulation around cartridge housing window.	Clean the area around the cartridge housing window. See Section 3 for cleaning procedures.
Ink spots or streaks on front of processed document	Ink accumulation around window in rear image camera removable wall due to a fully saturated built-in ink pad in the wall.	Clean both the fixed and removable rear image camera walls. See Section 3 for cleaning procedures. Replace the rear removable wall. See Section 4 for information on ordering the rear image camera removable wall with built-in ink pad.
“Cartridge Missing” message displayed on PC. “	Inkjet cartridge not properly installed in the cartridge housing.	Turn the unit off. Remove and reinsert the cartridge into the housing. The unit with automatic feeder flag -- ensure that the edge of the cartridge aligns with the registration sticker on the housing.
	Stray ink contaminated the inkjet cartridge contacts or the contacts in the cartridge housing.	Clean the contacts inside the cartridge housing and on the inkjet cartridge. See Section 3 for cleaning procedures.
	If the cartridge is properly installed in the cartridge housing, and the contacts on the cartridge and in the cartridge housing have been cleaned, the cartridge is defective.	Replace the inkjet cartridge. See Section 4 for information on ordering a new cartridge.

Pockets

Symptom	Possible Cause	Solution
Documents buckle and jam in pockets, stack poorly.	Check limiters not set correctly.	Move check limiter out far enough to accommodate the longest document.
All documents flow to wrong pocket.	Defective pocketing mechanism.	If problem exists using other applications the unit requires repair.

Symptom	Possible Cause	Solution
Some items flow to wrong pocket.	Defective pocketing mechanism.	If problem exists using other applications the unit requires repair.
	Poor magnetic (MICR) reader performance.	Verify reader is performing as expected. See “Reader.” If problem exists using other applications the unit requires repair.
	Inadequate image quality.	If a CAR/LAR application is in use verify it is operating correctly, view images if possible. Clean the front and rear image glass and retry.

Parts

Symptom	Possible Cause	Solution
Covers/top covers cracked or broken.	Handling or accidental damage.	Contact Digital Check for replacements.

Additional Replacement Items

No.	Part Number	Description	Shape	The Product Applied on
1	82275245-000	Pocket gate		QDS20012-SYS/ QDS20012-SYS-FE
2	82275248-000	The pocket belts	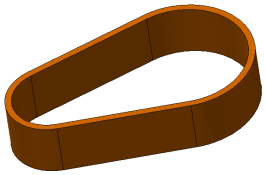	QDS20012-SYS/ QDS20012-SYS-FE
3	82276324-000	Pocket diverter motors ASM	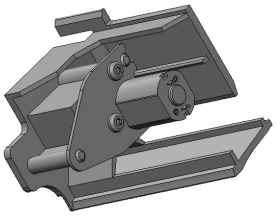	QDS20012-SYS/ QDS20012-SYS-FE
4	82275251-000	Power supply NES-150-24		QDS20012-SYS
5	82276511-000	Ceramic MICR head assembly		QDS20012-SYS/ QDS20012-SYS-FE
6	82275253-000	ASM, endorser		QDS20012-SYS/ QDS20012-SYS-FE
7	82244773-002 (existing #)	Feeder wall assembly	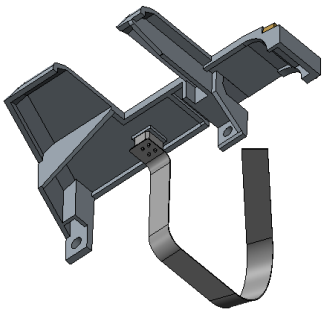	QDS20012-SYS/ QDS20012-SYS-FE

8	82275255-000	ASM, channel sensor		QDS20012-SYS/ QDS20012-SYS-FE
9	82275257-000	ASM, front CIS wall (cis/sensor)		QDS20012-SYS
10	82275258-000	ASM, rear CIS wall	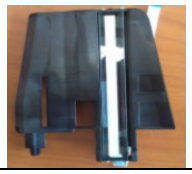	QDS20012-SYS/ QDS20012-SYS-FE
11	82275259-000	Track motor assembly		QDS20012-SYS/ QDS20012-SYS-FE
12	82275260-000	Feed motor assembly		QDS20012-SYS/ QDS20012-SYS-FE
13	82275261-000	ASM, Pocket full sensor	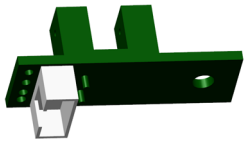	QDS20012-SYS/ QDS20012-SYS-FE
14	82275262-000	ASM, Pocket indicate led	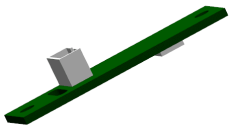	QDS20012-SYS/ QDS20012-SYS-FE
15	82275263-000	Inner cover ASM		QDS20012-SYS
16	82275265-000	Out Cover1		QDS20012-SYS

17	82275266-000	Outer cover2		QDS20012-SYS
18	82275267-000	Outer cover3		QDS20012-SYS/ QDS20012-SYS-FE
19	82275268-000	Main control board PCBA	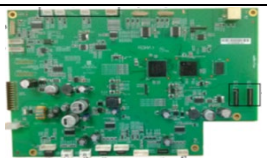	QDS20012-SYS
20	82275269-000	Daughter board PCBA		QDS20012-SYS/ QDS20012-SYS-FE
21	82275270-000	MICR control board PCBA	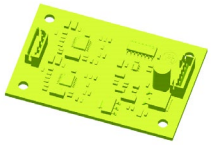	QDS20012-SYS/ QDS20012-SYS-FE
22	IS0033	Waffle card		QDS20012-SYS
23	82275273-000	Calibration Paper	110mm*160mm, other specifications with 82273604-000,	QDS20012-SYS/ QDS20012-SYS-FE
24	82163072-000 (existing)	FRU, COMPRESSION SPRING, PULLOUT, UPSTREAM		QDS20012-SYS/ QDS20012-SYS-FE
25	82163098-000 (existing)	FRU, COMPRESSION SPRING, PULLOUT, DOWNSTREAM		QDS20012-SYS/ QDS20012-SYS-FE

26	82275275-000	Compression spring	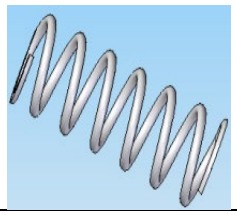	QDS20012-SYS/ QDS20012-SYS-FE
27	82275277-000	Spring, inner cover fixed		QDS20012-SYS/ QDS20012-SYS-FE
28	82275279-000	Torsion spring		QDS20012-SYS/ QDS20012-SYS-FE
29	82275281-000	Extension spring OD .180 wd .022		QDS20012-SYS/ QDS20012-SYS-FE
30	82275282-000	Torsion spring		QDS20012-SYS/ QDS20012-SYS-FE
31	82275250-000	Extension spring		QDS20012-SYS/ QDS20012-SYS-FE
32	82275284-000	Extension spring		QDS20012-SYS/ QDS20012-SYS-FE
33	82275285-000	Extension spring	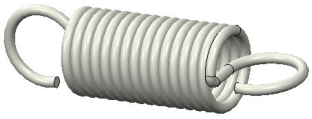	QDS20012-SYS/ QDS20012-SYS-FE
34	82271776-000 (existing #)	FRU, TIMING BELT 48T	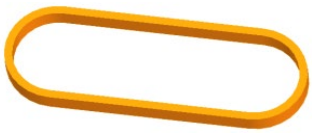	QDS20012-SYS/ QDS20012-SYS-FE

35	82271784-000 (existing #)	FRU, TIMING BELT, 51T		QDS20012-SYS/ QDS20012-SYS-FE
36	82233263-000 (existing #)	track belt		QDS20012-SYS/ QDS20012-SYS-FE
37	82275254-000	flag arm asm	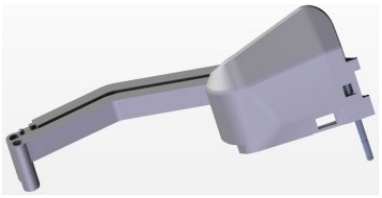	QDS20012-SYS/ QDS20012-SYS-FE
38	82275288-000	separator arm asm		QDS20012-SYS/ QDS20012-SYS-FE
39	82275290-000	Indicator Light ASM & Double Documents Sensor ASM		QDS20012-SYS/ QDS20012-SYS-FE
40	82275286-000	U track wall asm		QDS20012-SYS/ QDS20012-SYS-FE
41	82275292-000	pocket module plate asm (motor, roller, and belt)	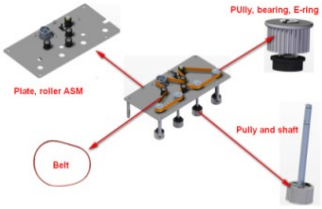	QDS20012-SYS/ QDS20012-SYS-FE

42	82275293-000	Track roller	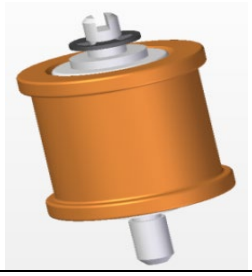	QDS20012-SYS/ QDS20012-SYS-FE
43	82275294-000	Tall pocket roller asm（Kick paper roller, pocket）	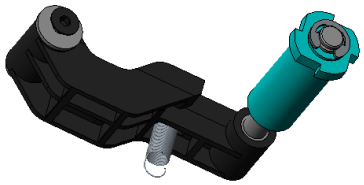	QDS20012-SYS/ QDS20012-SYS-FE
44	82275295-000	pocket pinch roller	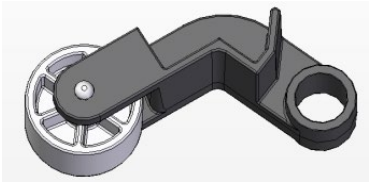	QDS20012-SYS/ QDS20012-SYS-FE
45	82275296-000	left pull out roller asm with the compression spring 82140765-000	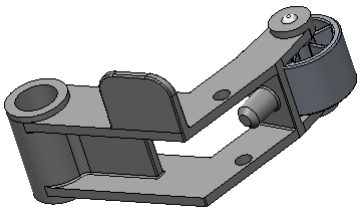	QDS20012-SYS/ QDS20012-SYS-FE
46	82275297-000	right pull-out roller asm with the compression spring 82140831-000	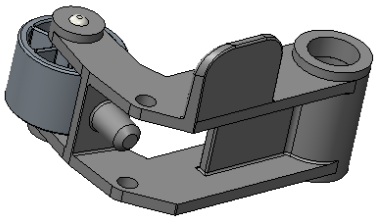	QDS20012-SYS/ QDS20012-SYS-FE
47	82275299-000	belt pressure roll assembly	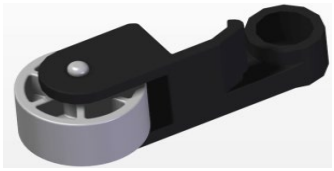	QDS20012-SYS/ QDS20012-SYS-FE

48	82275300-000	FRU, pulley assy .910d	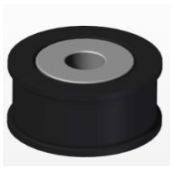	QDS20012-SYS/ QDS20012-SYS-FE
49	82275301-000	Communication cable, connect MICR and PCBA		QDS20012-SYS/ QDS20012-SYS-FE
50	82275302-000	Communication cable (485), connect first pocket module and PCBA	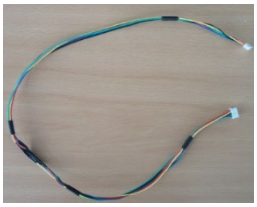	QDS20012-SYS/ QDS20012-SYS-FE
51	82275303-000	Communication cable (485), connect first pocket module and second pocket module		QDS20012-SYS/ QDS20012-SYS-FE
52	82275304-000	Communication cable 485), connect first pocket module and third pocket module	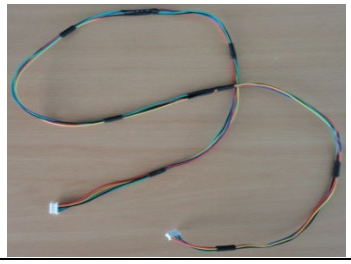	QDS20012-SYS/ QDS20012-SYS-FE
53	82275305-000	Power cord, connect power adapter and first pocket module	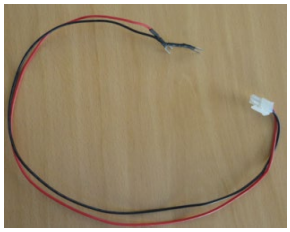	QDS20012-SYS/ QDS20012-SYS-FE
54	82275307-000	Power cord, connect power adapter and PCBA	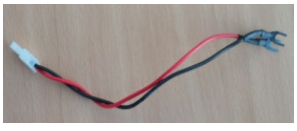	QDS20012-SYS/ QDS20012-SYS-FE

55	82275308-000	Power cord, connect pocket module	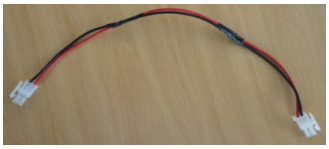	QDS20012-SYS/ QDS20012-SYS-FE
56	82275309-000	Cable, connect power plug and switch, blue	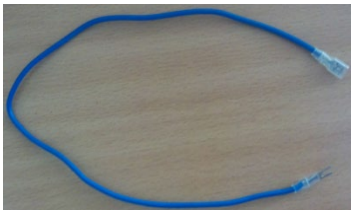	QDS20012-SYS/ QDS20012-SYS-FE
57	82275310-000	Cable, connect power plug and switch, brown	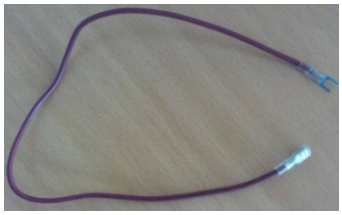	QDS20012-SYS/ QDS20012-SYS-FE
58	82275311-000	Power plug ASM		QDS20012-SYS/ QDS20012-SYS-FE
59	82275333-000	First Pocket Wall Assembly-wall, sensors, paddles, springs-all parts required as a standalone sub assembly	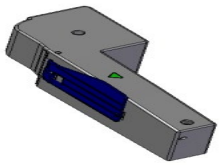	QDS20012-SYS/ QDS20012-SYS-FE
60	82275342-000	General, pocket wall assembly	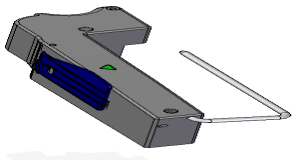	QDS20012-SYS/ QDS20012-SYS-FE
61	82275343-000	Final, pocket wall assembly	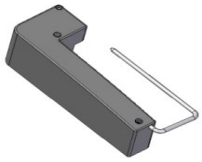	QDS20012-SYS/ QDS20012-SYS-FE

62	82275334-000	Spring, presentment (Delrin POM 900P BK602)	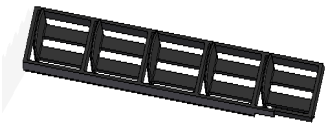	QDS20012-SYS/ QDS20012-SYS-FE
63	82275335-000	Front removable wall assembly-wall + spring		QDS20012-SYS/ QDS20012-SYS-FE
64	82275336-000	Pocket toothed roller kit-12x rollers-12x E-rings as a kit	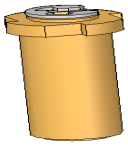	QDS20012-SYS/ QDS20012-SYS-FE
65	82275338-000	"I-TRACK"-straight track will all pinch rollers assembled		QDS20012-SYS
66	82275339-000	Badge-Button Kit-all parts for inner removable cover minus the cover itself. Kit for the inner cover (consist of badge, and button assembly)	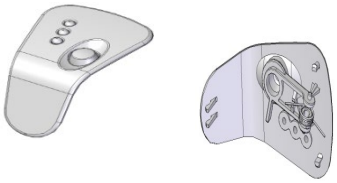	QDS20012-SYS/ QDS20012-SYS-FE
67	82275349-000	QUANTUM DS AUTO-RETRACT KIT		QDS20012-SYS/ QDS20012-SYS-FE
68	82275350-000	NEW SNBC CAM ASSEMBLY-cam+ bushing+ clutch	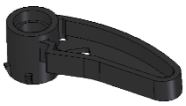	QDS20012-SYS/ QDS20012-SYS-FE
69	82276147-000	FRU-QDS Feeder Shaft-Separator	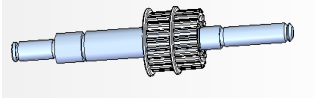	QDS20012-SYS/ QDS20012-SYS-FE
70	82276146-000	FRU-QDS Feeder Shaft-CAM	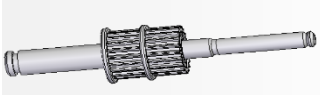	QDS20012-SYS/ QDS20012-SYS-FE

71	82276149-000	Outer Cover with the Silk Screen	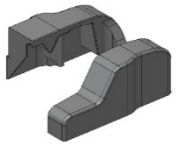	QDS20012-SYS-FE
72	82276150-000	FRU-Inner Cover w/ Badge, QDS-FE		QDS20012-SYS-FE
73	82276151-000	FRU, Front Outer Image Cover QDS-FE	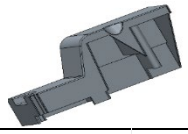	QDS20012-SYS-FE
74	82276152-000	FRU, Front Inner Image Cover QDS-FE	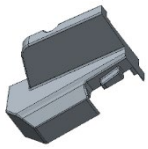	QDS20012-SYS-FE
75	82276154-000	FRU, Front Endorser Track Wall-QDS-FE	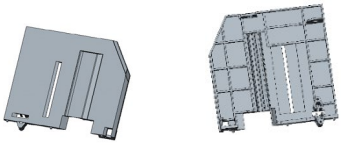	QDS20012-SYS-FE
76	82276155-000	FRU, Roller Spring Bracket, QDS-FE	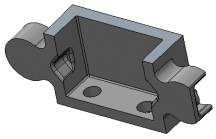	QDS20012-SYS-FE
77	82276156-000	FRU, Fixing Bracket, QDS-FE	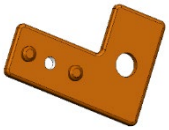	QDS20012-SYS-FE
78	82276157-000	FRU, Compression Spring, Roller, next to F Flag Pivot. QDS-FE		QDS20012-SYS-FE
79	82276158-000	FRU, Main PCBA, QDS-FE	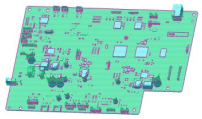	QDS20012-SYS-FE
80	82276159-000	FRU-Power Supply, QDS-FE	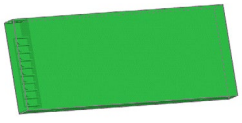	QDS20012-SYS-FE

81	82276148-000	FRU-QDS-FE I-Track	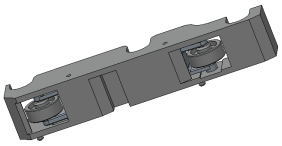	QDS20012-SYS-FE
82	82275646-000	FRU, QDS Image Calibration Document (20 per pack)	/	QDS20012-SYS/ QDS20012-SYS-FE
83	82275247-000	Rear CIS press ASM	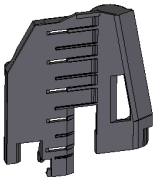	QDS20012-SYS/ QDS20012-SYS-FE
84	750306904	Feeder tire kit (2X feeder tire + 1X separator tire	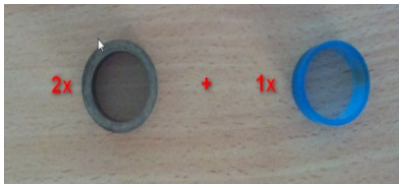	QDS20012-SYS/ QDS20012-SYS-FE
85	82276153-000	Ink Catcher Wall, QDS-FE	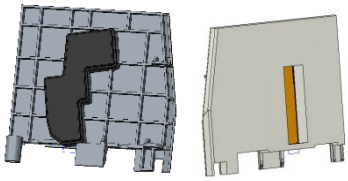	QDS20012-SYS-FE